EZDOWN
The safest way to lower a tailgate

EZDown Instruction

FIAT FULLBACK ED2000

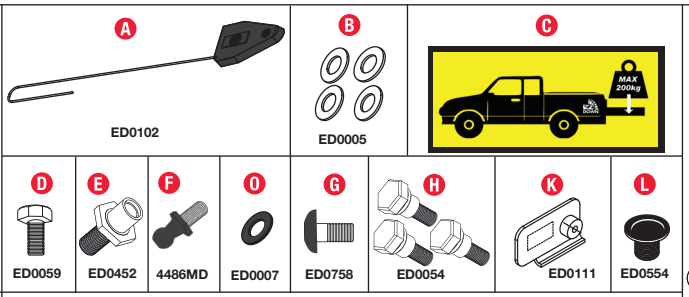

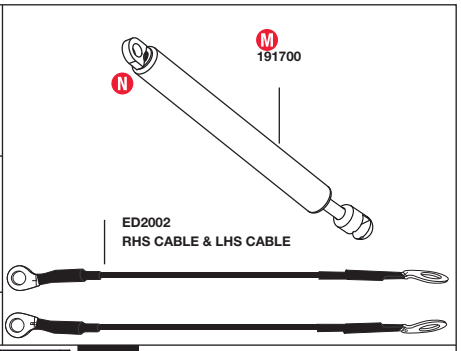

1

RHS and LHS are determined when sitting in the Drivers side of the Vehicle.

First Fit the RHS completely before removing the LHS original bars or cables and then progress to fitment of the LHS.

2

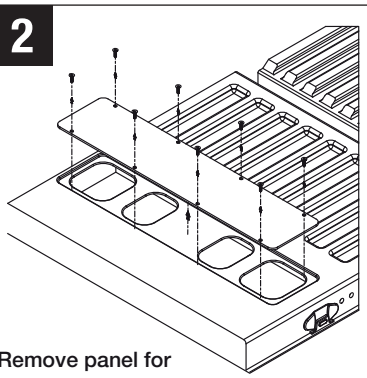

Remove panel for easy access

3

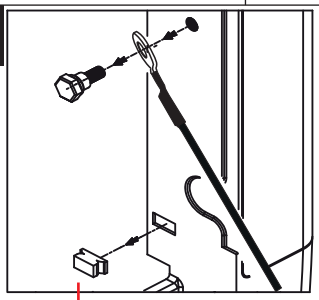

A

Remove cables or metal bars first off RHS and then proceed to LHS.

4

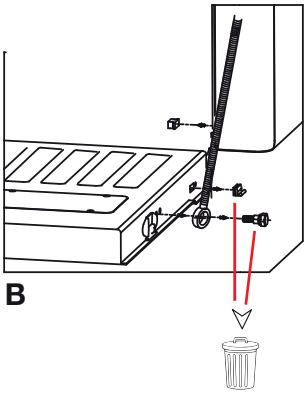

B

5

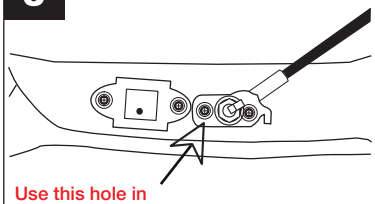

Use this hole in the tailgate for the cable stud ED0054

6

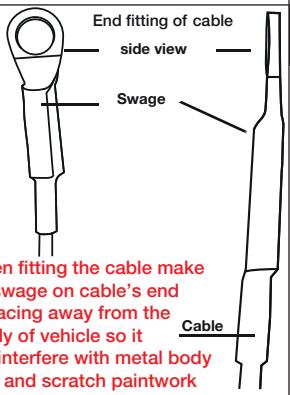

NB !! When fitting the cable make sure the swage on cable's end fitting is facing away from the metal body of vehicle so it does not interfere with metal body of vehicle and scratch paintwork

7

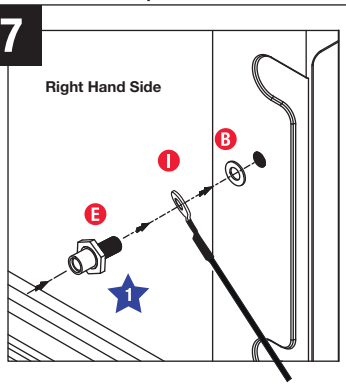

8

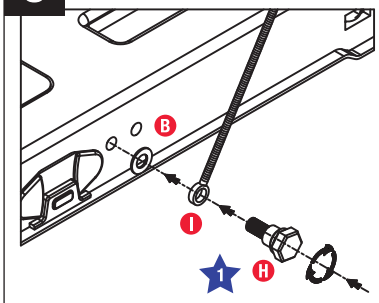

9

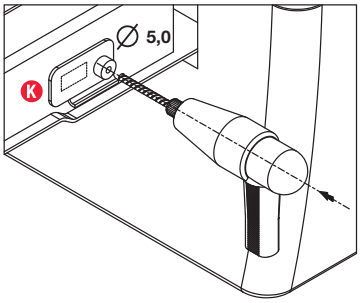

10

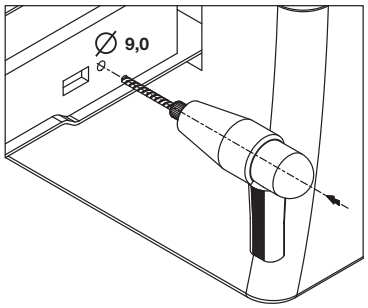

11

Place inner bracket inside the tailgate panel by guiding with the metal rod then after fastening break off the handle

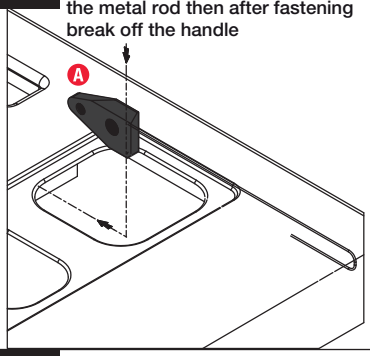

12

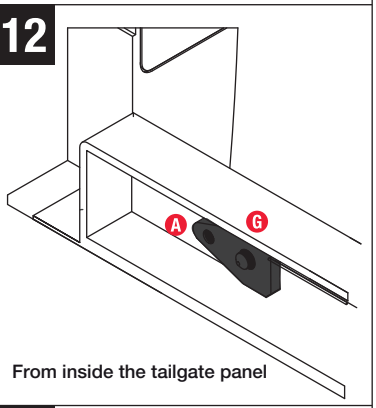

From inside the tailgate panel

13

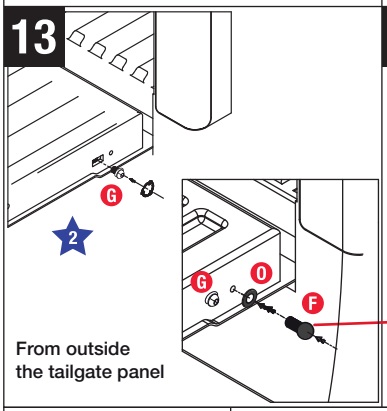

From outside the tailgate panel

14

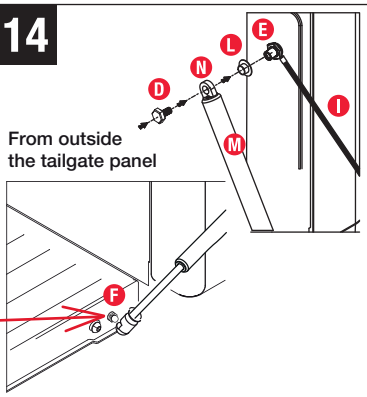

From outside the tailgate panel

15

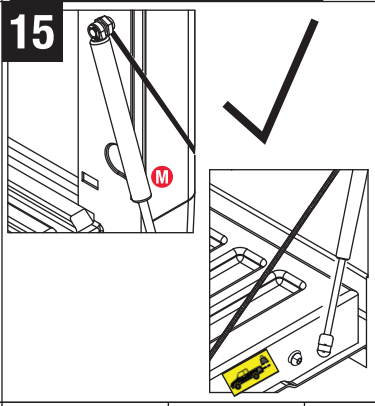

16

Fit kit on RHS completely first then repeat on LHS with the LHS cable

Ensure Cables are taking weight of the tailgate and not the Damper

Ensure Cables are Free Flowing

FITTING CODE	MANUFACTURER	MODEL TYPE	YEAR	STOCKIST	PRODUCT	REVISION	LABOUR	DATE	PAGE
ED2000	FIAT	FULLBACK	2017	DEALERSHIPS	EZDOWN	6	20min	27/02/2018	1
TORQUE – N.m	1 27N.m±2N.m			2 15N.m±2N.m		www.ezdown.co.za			

NB: After installation please close tailgate gently to ensure that there is no interference with any hardware.

PROUDLY SOUTH AFRICAN

IMPORTANT: